Multi Color Water Powered Led Shower with Adjustable Body Jets and Mixer

INSTALLATION INSTRUCTIONS

Before installing, read entire installation guide. Observe all local building and safety codes.

We recommend consulting a professional if you are unfamiliar with installing bathroom fixtures and plumbing.

THERMOSTATIC VALVE INFORMATION

The thermostatic shower system features three valves that allow you to keep water temperatures consistent each time the shower is used and create a customised shower system.

Valve A operates as a standard three-way shower diverter. You can select a combination of shower heads, body sprays and hand showers. This valve is able to connect to up to three different outputs. If only two outputs are desired, close the third output with a threaded brass plug (provided). The three-way diverter valve allows you to alternate between any of your selected shower outputs by directing the water from the shower head to each additional accessory, one at a time and features an On/Off switch to turn your shower or tub on and off.

Valve B connects conventionally to your hot and cold water supply with the hot water on the left and the cold water on the right. This valve is used to control the water temperature only, it will not turn the water on or off.

Valve C enables you to have an additional output. This valve operates independently from Valve A allowing two outputs to be used at one time. This valve is typically connected to the body jet feature, allowing the body jets and shower head to be used simultaneously but can be configured to accommodate any speciality shower design. If no additional output is desired this valve can be closed with a threaded brass plug.

Your plumber can determine the proper plumbing layout for your customised shower configuration. All rough-in work should be completed by a professional.

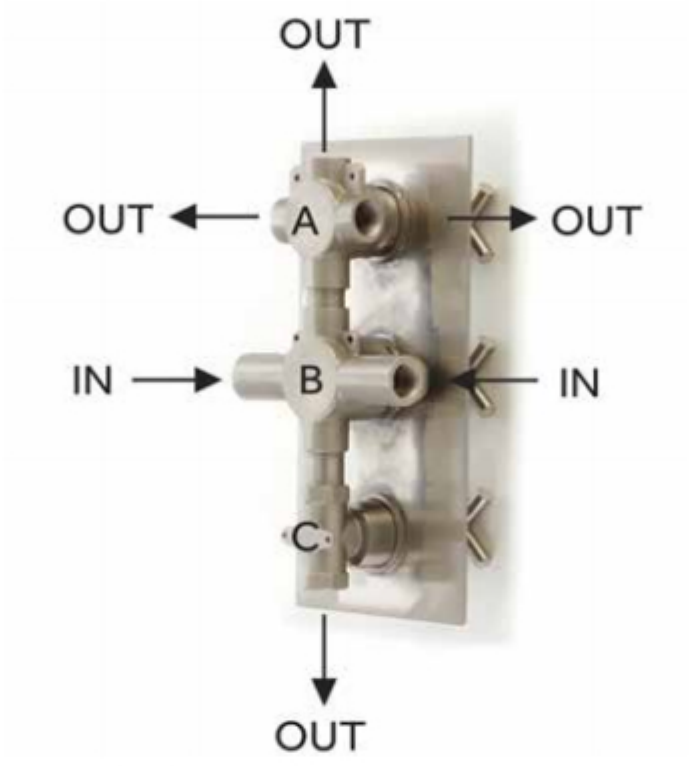

VALVE SPECIFICATIONS

INSTALLATION

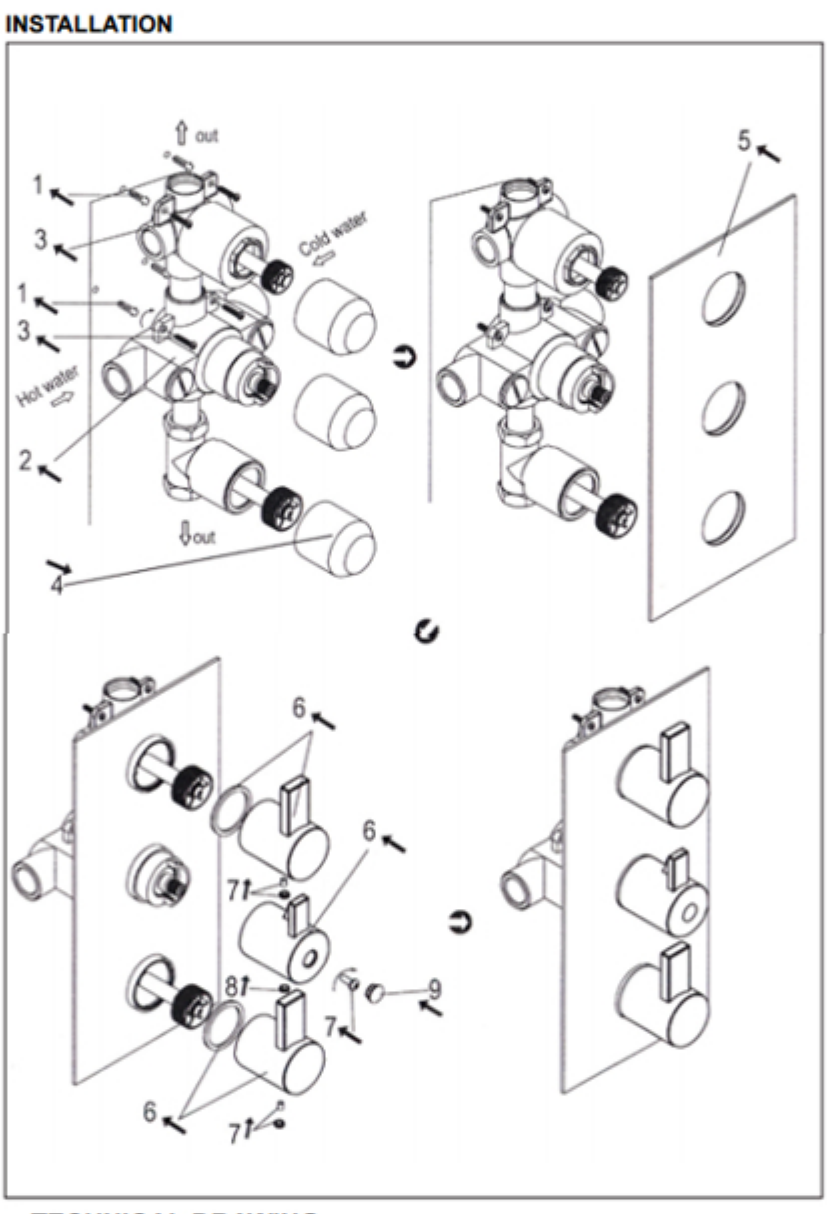

TECHNICAL DRAWING

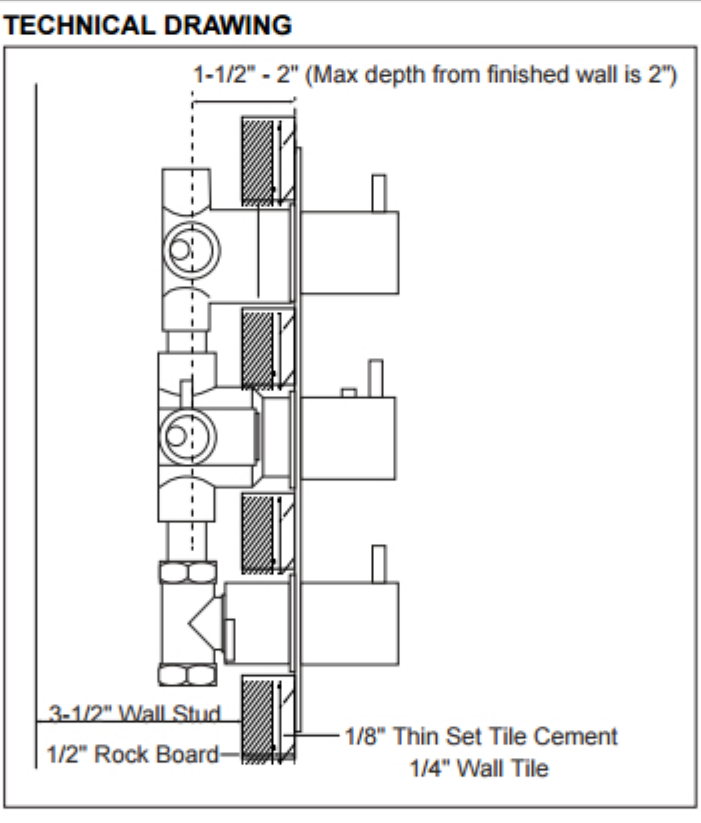

ALTERNATE VIEW

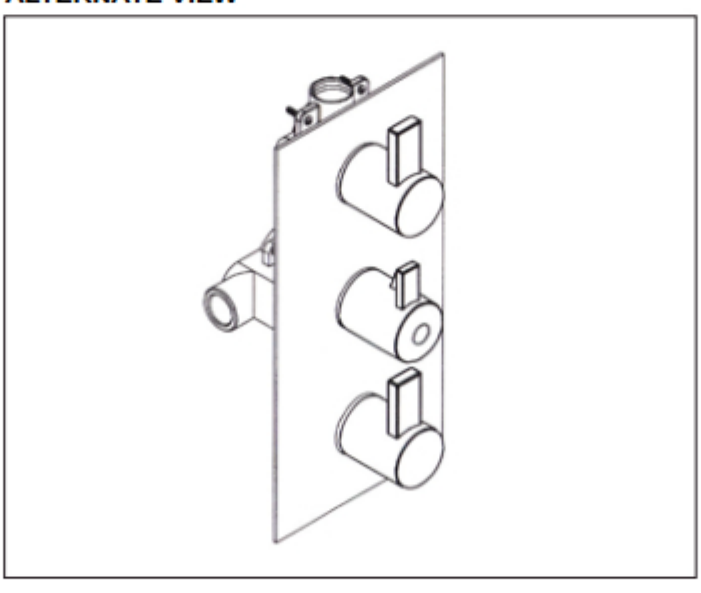

INSTALLATION

SHOWER ARM

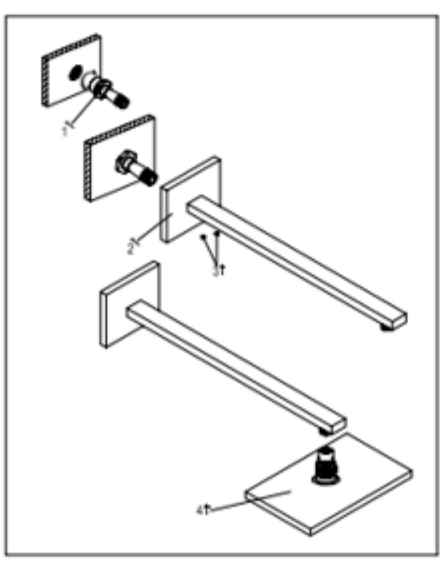

HAND SHOWER AND TUB SPOUT

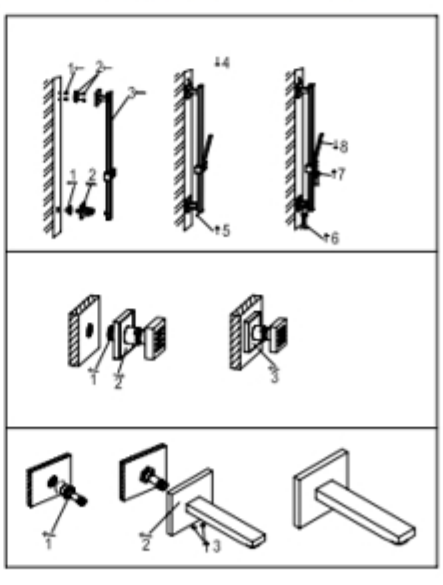

THERMOSTATIC MIXER WITH 3-WAY DIVERTER

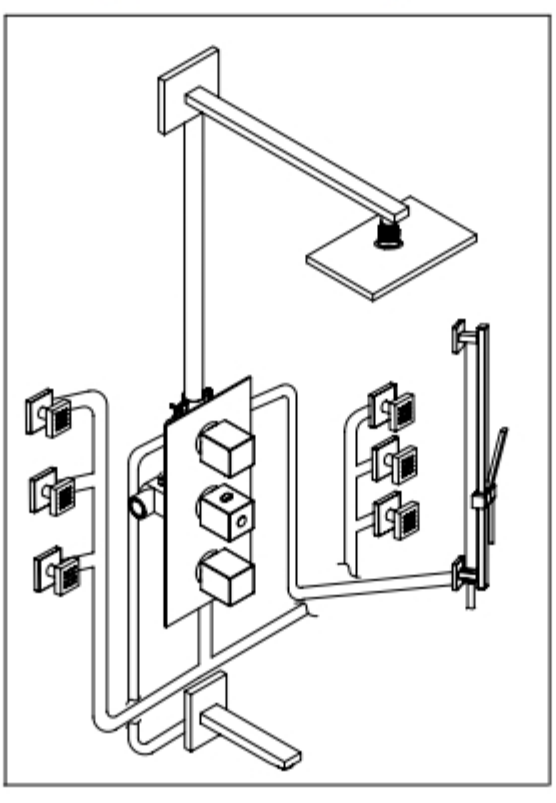

This General diagram and installation instructions are not intended for any specific model, but is presented as a general guideline for Installations!